SOUS VIDE IMMERSION CIRCULATOR PRECISION COOKER

QUICKSTART GUIDE

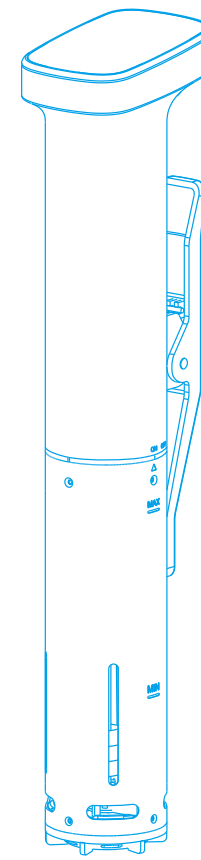

Model: MZJ-01/MZJ-02

Misuse may cause safety risks or damage the machine. Please read this operating guide carefully first and save it for future reference when needed.

01 WHAT YOU NEED

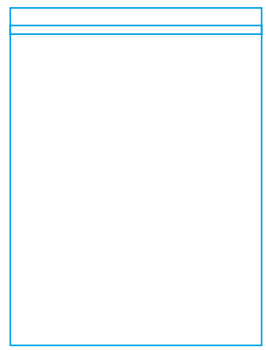

Sealable bags

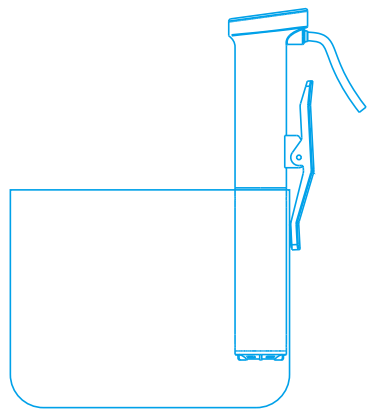

Pot (any pot)



Something to cook

02 SETTING UP

·CLAMP cooker to the side of any pot.

·FILL water between min & max line.

·PLUG IN Machine

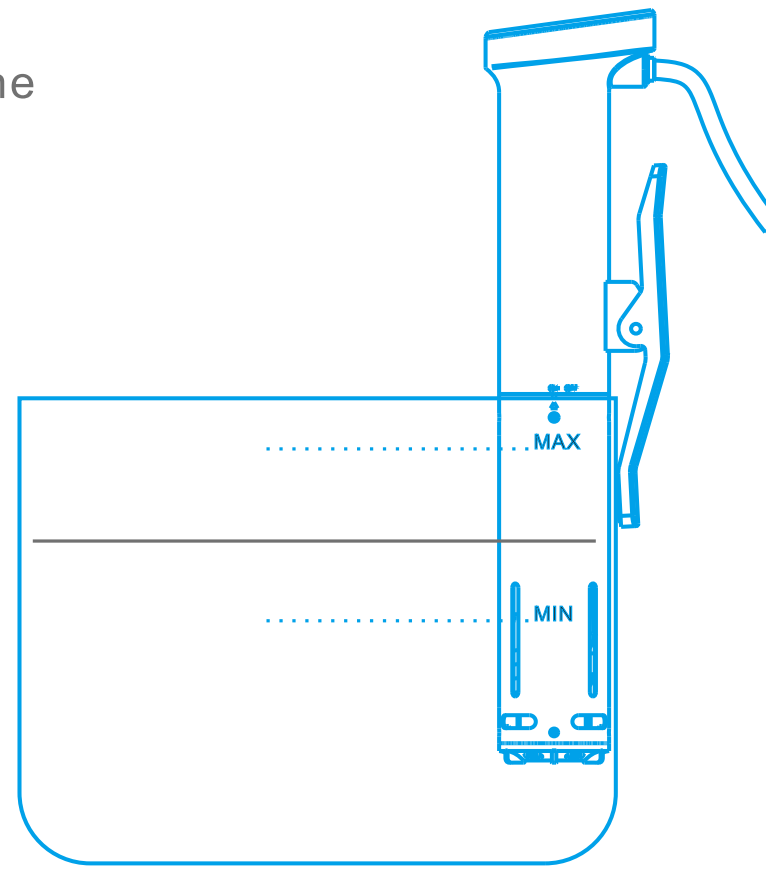

03 ENJOY YOUR COOKING

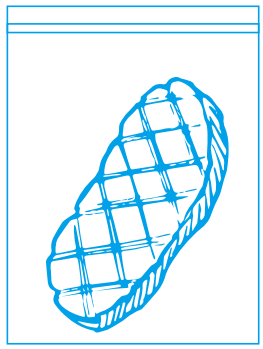

a.Place your food in a sealed bag, removing as much air as possible.

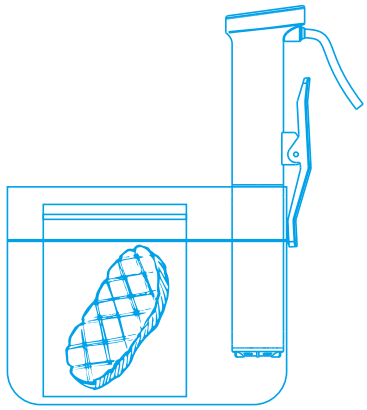

b.Submerge the bag in the pot and cook to your desired level of doneness.

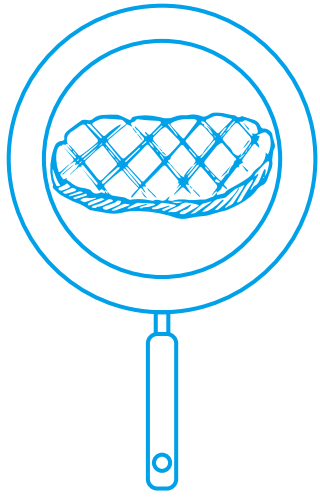

c.Remove your food from the bag and sear it in a hot pan for a crispy texture. Enjoy!

Note: ① Put the food bag into the pot, and the water level will increase, therefore do not fill it up too high.
② Plug in machine then sound a beep, that mean your machine standby.



04 INTRODUCTION

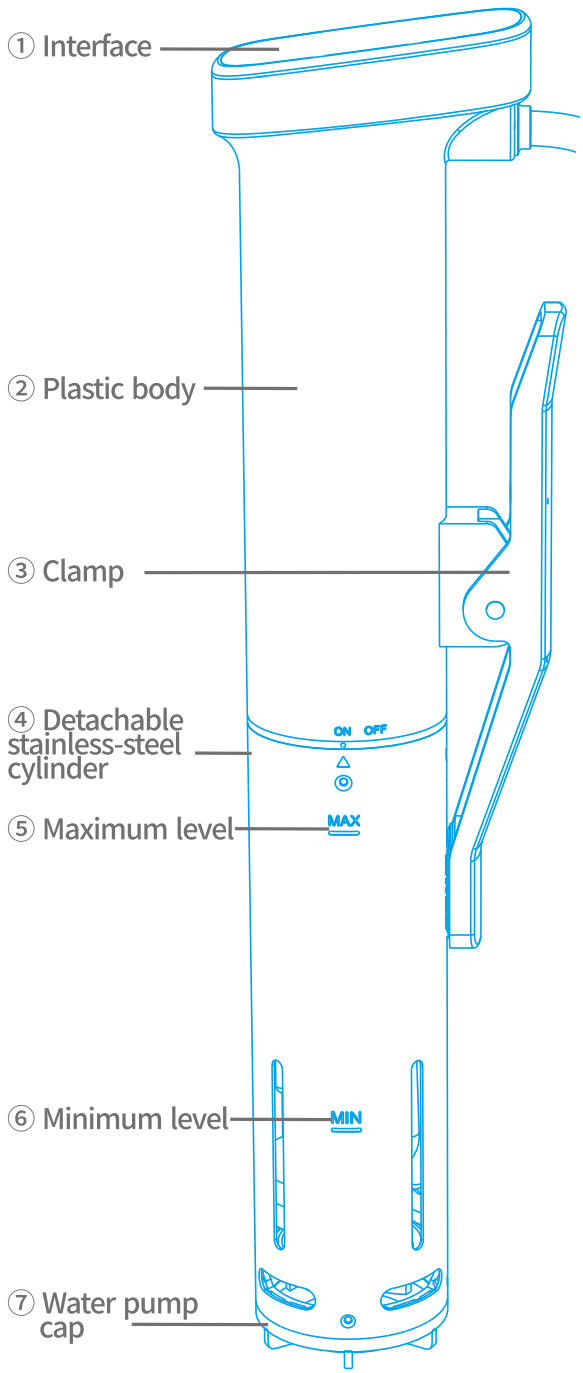

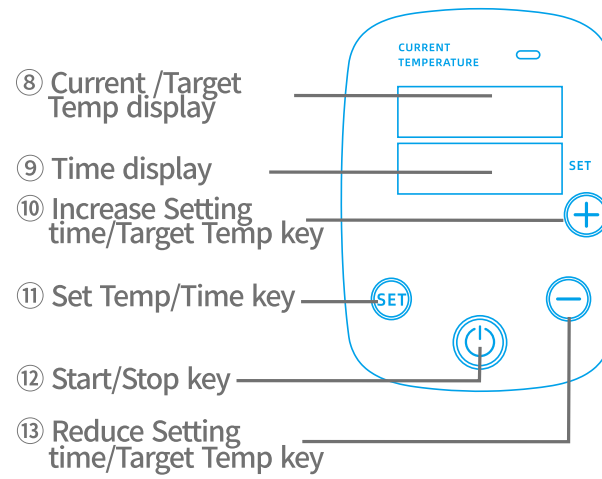

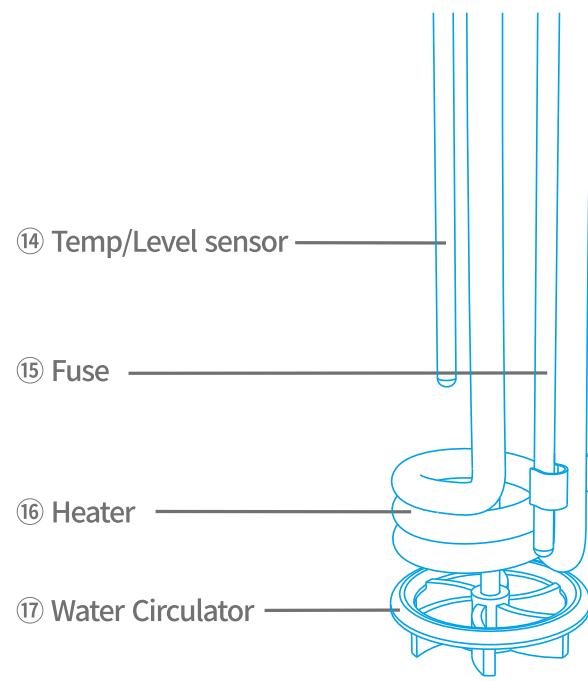

05 OPERATION INTERFACE

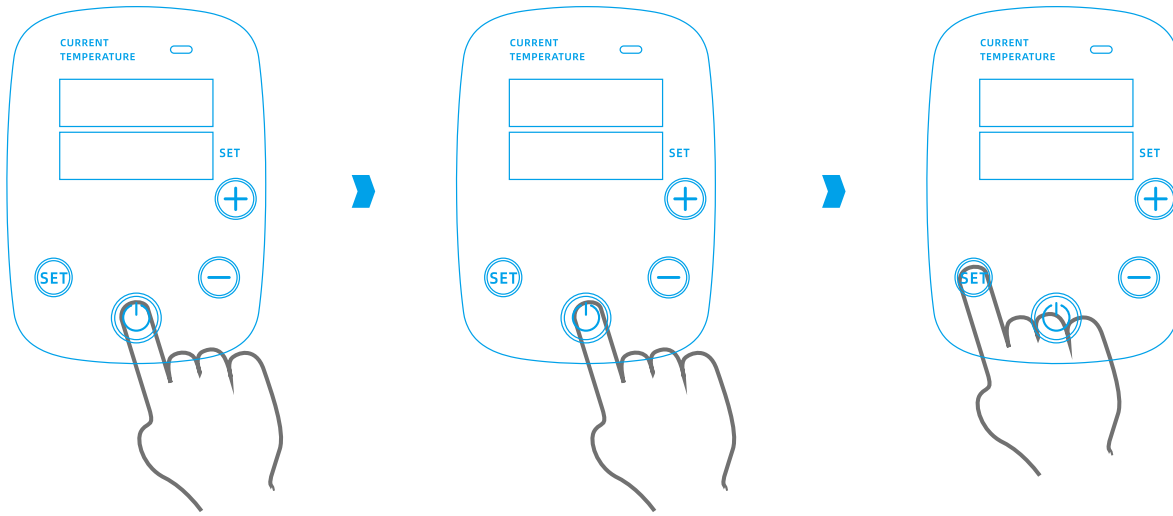

1. Standby: Plug in machine, a beep sound and all light up (Lasts 1.5 seconds), then the ⏻ goes into red breathing light.

2. Start/Stop: press and hold " ⏻ " button for 3 seconds, Temp and Time display light up, this way you can set Temp/ Time and cooking.

3. Switch between Fahrenheit & Celsius: Press and hold "SET" key for 3 seconds.

06 SET TEMP

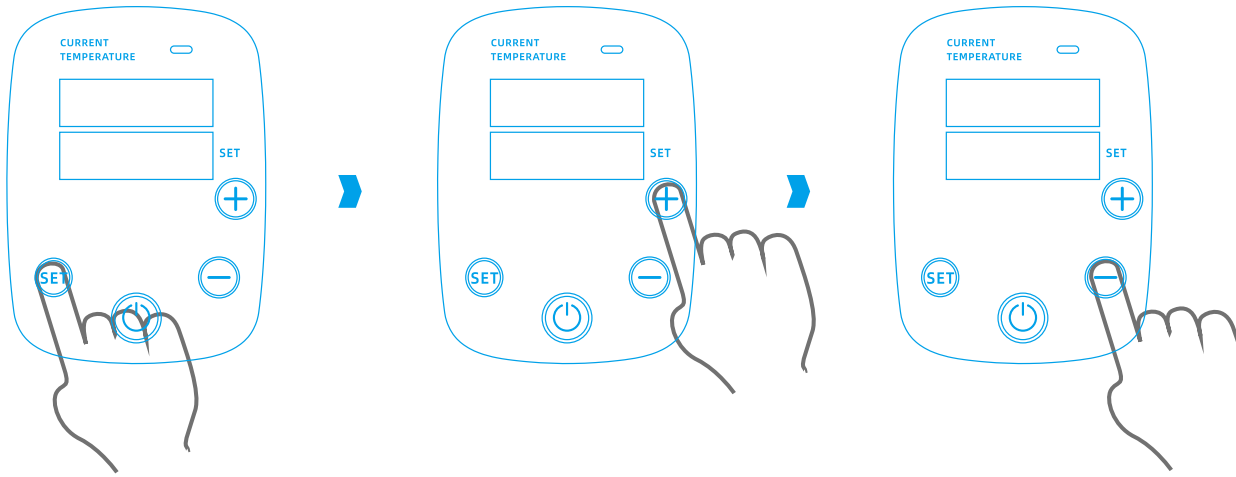

4. Press the "SET" KEY, the temperature icon is flashing, then press "+" or "−" to reach the target temperature you need (default temperature 60℃, maximum 90℃).

Note: Press "+" or "−" key to increase or decrease by 0.1, press and hold "+" or "−" key to increase or decrease to reach quickly.

07 SET TIME AND COOKING

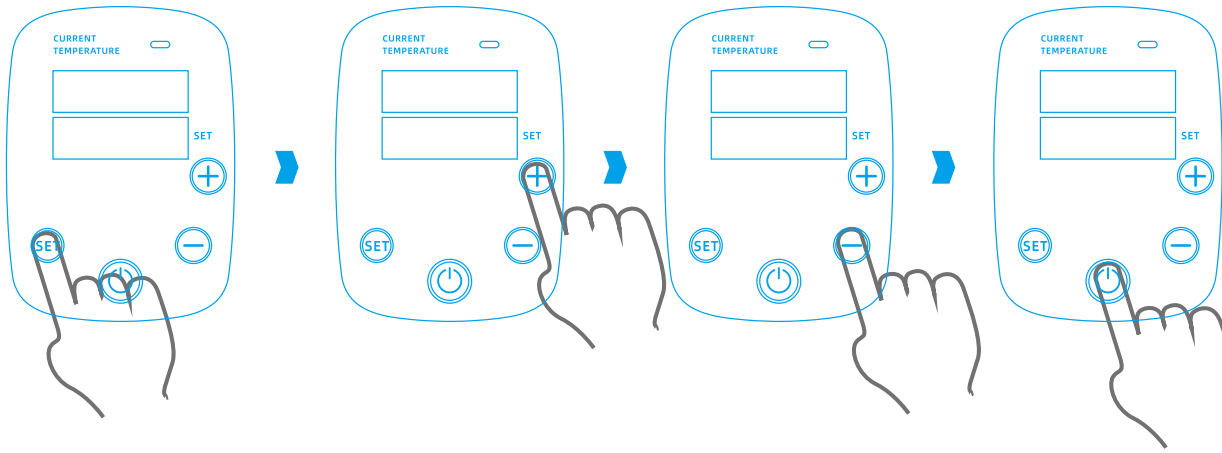

5. After setting the temperature. press the " SET " key again to set the time, the time icon is flashing. the hour and minute are also set by the " + " or " − " key. the hour is 0~99 can be set.

6. After setting the temperature and time, press the “ ⏻ ” key and a “beep” sound to cook. countdown starts when the set temperature is reached, while cooking finished, beep warning sound for 3 minutes, then the machine back to standby.

08 OTHER SETTINGS

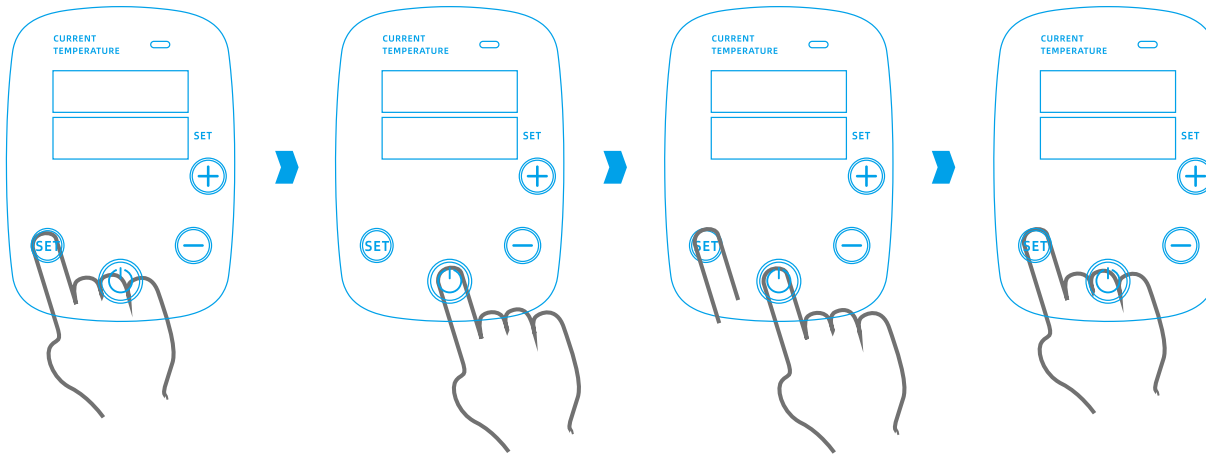

7. During cooking, the “ ” key lights up in blue. Press the “ ” key and cooking will be pause and start. Press the “ SET ” key to adjust the target temperature mode. While the target temperature is reached, beep sounds 4 times. Press and hold the “ ” key for 3second, the machine will be turn off and back to standby.

8. The touch-tone is a short beep, Volume 75 decibels.



09 PRODUCT MODEL AND SPECIFICATION

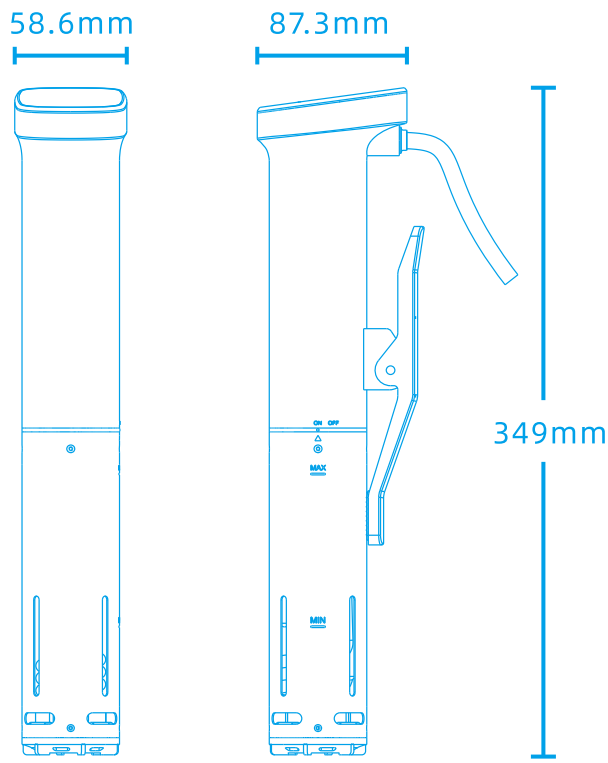

Model	MZJ-01	MZJ-02
Heating power	1100W±10%	1400W±10%
Input voltage	AC120V/60Hz	AC230V/50Hz
Range of Temp	10℃~90℃/50℉~194℉	
Temp accuracy	±0.3℃/±0.6℉ (Ambient temp 25℃&77℉)	
Net weight	900g	
Dimensions	87.3x58.6x349mm	
Water level	Not lower than the min line	

10 TROUBLE CODE AND TROUBLESHOOTING

E01, E02	Temp sensor trouble
E03	Low level, add water to the pot.
E04	① Check whether the water circulator is blocked by obstacles. ②Motor failure.
E05	Heater fuse trouble

11 SAFETY WARNINGS AND GUIDE

- **Use it correctly to reduce the risk of fire, electric shock or injury:**

1. Do not use with damaged cord or plug.
2. If appliance is not working as it should, has been dropped, damaged, left outdoors, or dropped into water, return it to a service center before using.
3. Do not use outdoors.
4. Unplug the electrical cord when not in use and before servicing.
5. Do not allow to be used as a toy. Close attention is necessary when used by or near children.
6. Use only as described in this manual.
7. Do not pull or carry by cord or use cord as a handle.
8. Do not use extension cords or outlets with inadequate current carrying capacity.
9. Do not unplug by pulling on cord. To unplug, grasp the plug, not the cord.
10. Do not handle plug or appliance with wet hands.
11. Do not put any object into openings. Do not use with any opening blocked; keep free of dust, lint, hair, and anything that may reduce airflow.
12. Do not use appliance in flammable or combustible liquids such as gasoline, or use in areas where they may be present.
13. Store your appliance indoors in a cool, dry area.

• Always Exercise Basic Safety Precautions When Operating Electrical Appliances, Including the Following:

1. Read all instructions. Including the instructions what you're reading now.
2. Do not touch hot surfaces.
3. To protect against electrical shock, do not immerse cord, plugs, or the device's electrical components in water or other liquid.
4. Close supervision is necessary when appliance is used by or near children.
5. Unplug from outlet when not in use and before cleaning. Allow device to cool before assembling or disassembling.
6. Do not operate any appliance with a damaged cord or plug. Do not operate the appliance if it has malfunctioned or been damaged in any manner. Contact your seller for assistance and support.
7. The use of accessory attachments is not recommended by the appliance manufacturer and may cause injuries.
8. Do not use outdoors.
9. Do not let cord hang over the edge of the table or counter.
10. Do not let the cord come in contact with hot surfaces.
11. Do not place the device on or near hot gas or electric burner, or in a heated oven.
12. Use extreme caution when moving an appliance containing hot liquids.
13. Do not use appliance for anything other than its intended use.
14. Do not open bottom enclosure while device is plugged in or operating as there are heating elements and moving parts.
15. Do not use directly on a granite or marble surface. Always place an insulating surface between the hot pot and granite or marble surface.

Tips: It is recommended to use a 2.6~4-gal pot. The temperature accuracy may not be achieved if the pot is too big, so it is not recommended to exceed 4 gal.

